CML Microcircuits

COMMUNICATION SEMICONDUCTORS

High Resolution
Circuit Diagrams
for
EV9100

Complementary to CML User Manual: UM9100/3 May 2010

© 2010 CML Microsystems PLC

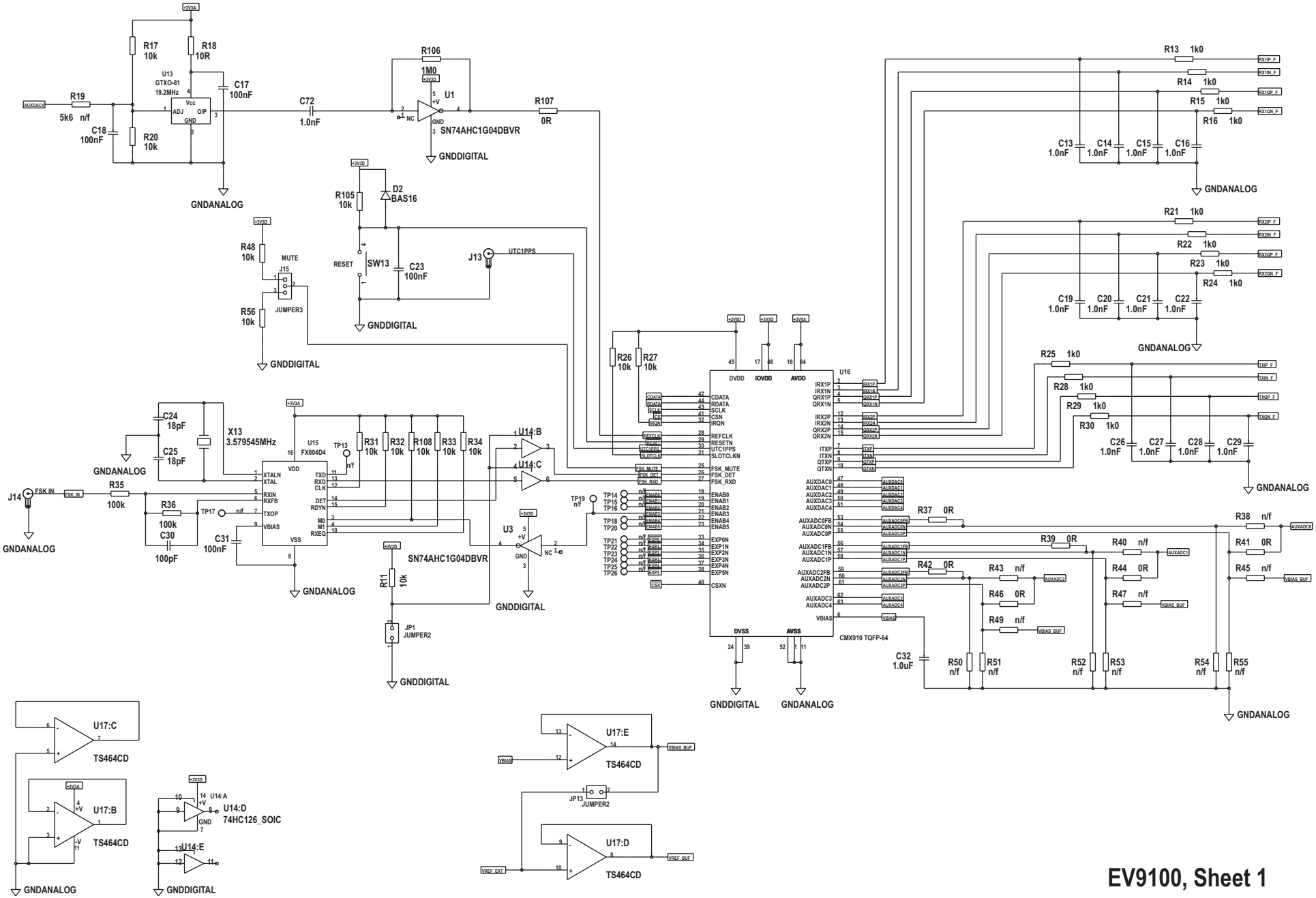

EV9100, Sheet 1

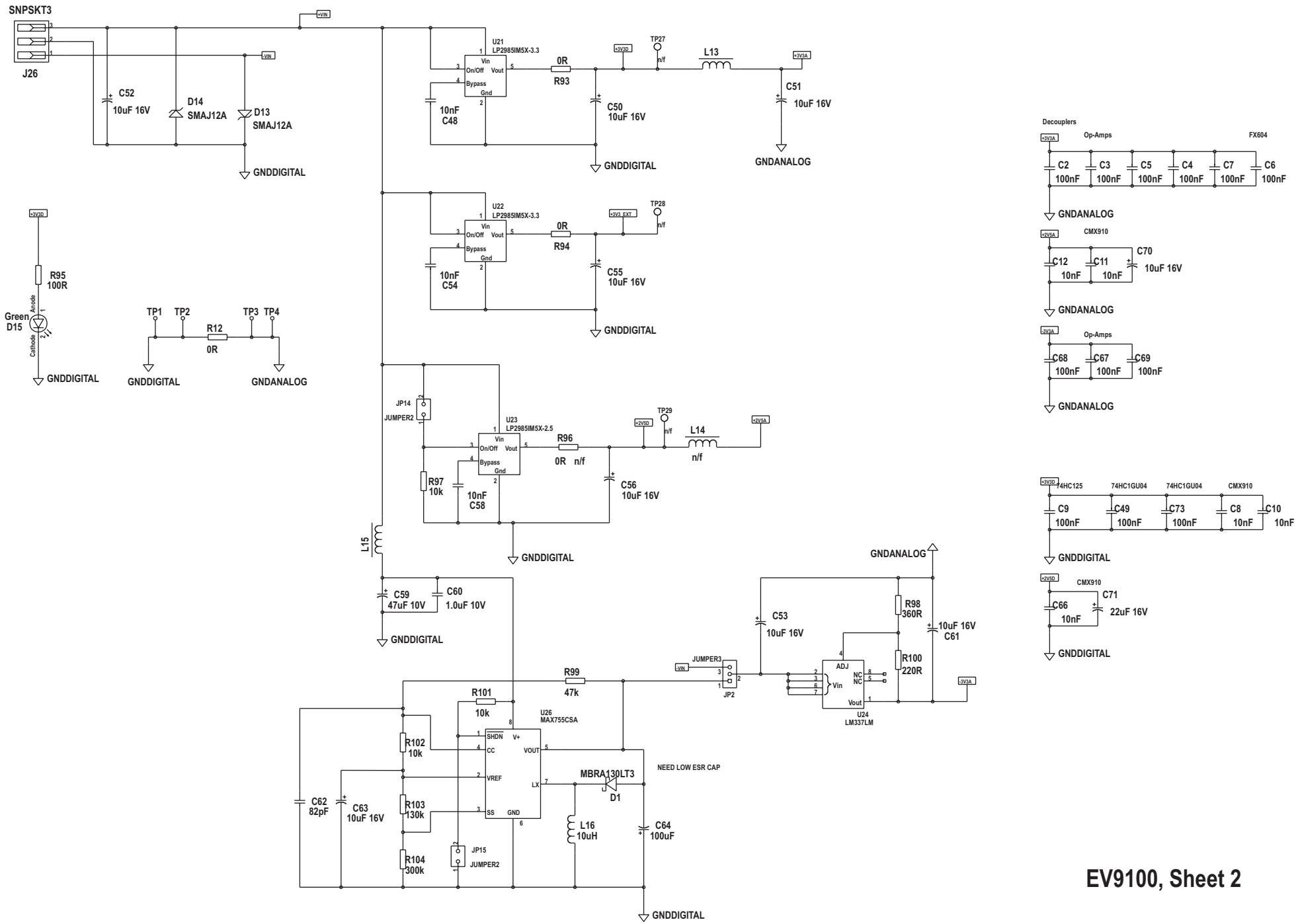

EV9100, Sheet 2

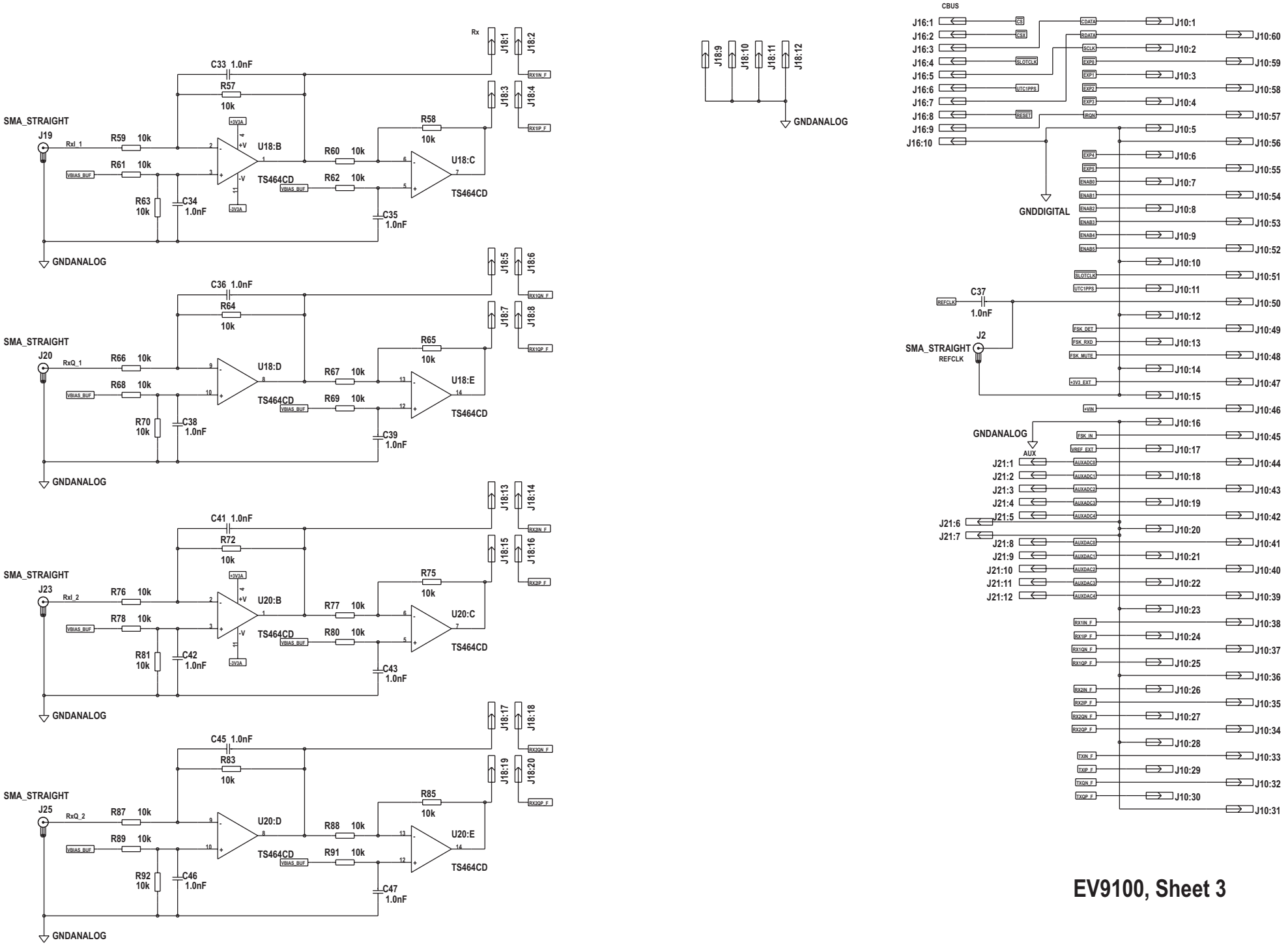

EV9100, Sheet 3

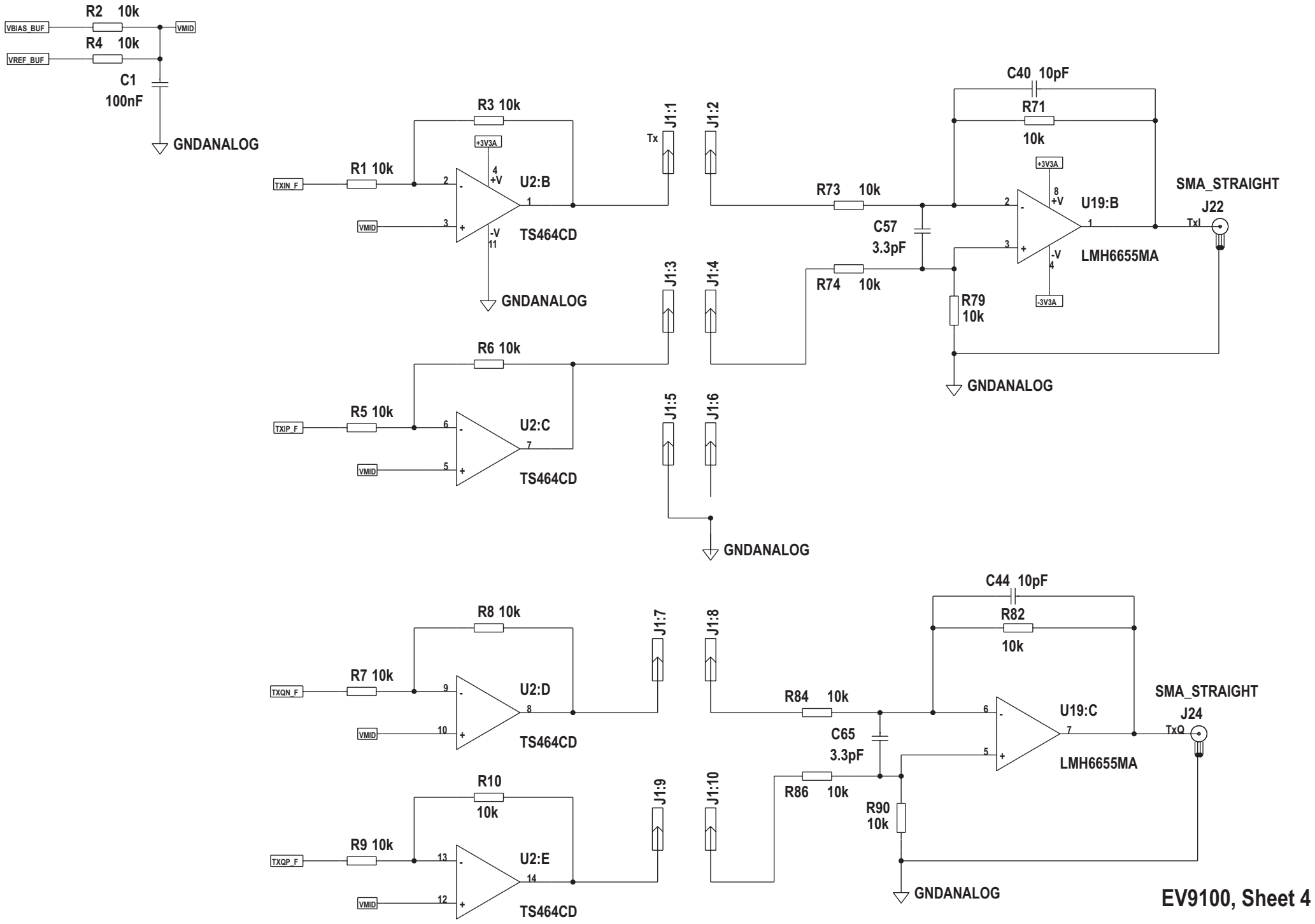

EV9100, Sheet 4